Cambridge Assessment International Education

Cambridge International AS & A Level

CANDIDATE NAME									
CENTRE NUMBER						CANDIDATE NUMBER			

4758728635

PHYSICS **9702/21**

Paper 2 AS Level Structured Questions **May/June 2022**

1 hour 15 minutes

You must answer on the question paper.

No additional materials are needed.

INSTRUCTIONS

- Answer **all** questions.
- Use a black or dark blue pen. You may use an HB pencil for any diagrams or graphs.
- Write your name, centre number and candidate number in the boxes at the top of the page.
- Write your answer to each question in the space provided.
- Do **not** use an erasable pen or correction fluid.
- Do **not** write on any bar codes.
- You may use a calculator.
- You should show all your working and use appropriate units.

INFORMATION

- The total mark for this paper is 60.
- The number of marks for each question or part question is shown in brackets [ ].

This document has **16** pages. Any blank pages are indicated.

DC (PQ/FC) 303274/2
© UCLES 2022

[Turn over

Data

acceleration of free fall	g	=	$9.81\ \text{m s}^{-2}$
speed of light in free space	c	=	$3.00 \times 10^{8}\ \text{m s}^{-1}$
elementary charge	e	=	$1.60 \times 10^{-19}\ \text{C}$
unified atomic mass unit	1 u	=	$1.66 \times 10^{-27}\ \text{kg}$
rest mass of proton	m_p	=	$1.67 \times 10^{-27}\ \text{kg}$
rest mass of electron	m_e	=	$9.11 \times 10^{-31}\ \text{kg}$
Avogadro constant	N_A	=	$6.02 \times 10^{23}\ \text{mol}^{-1}$
molar gas constant	R	=	$8.31\ \text{J K}^{-1}\ \text{mol}^{-1}$
Boltzmann constant	k	=	$1.38 \times 10^{-23}\ \text{J K}^{-1}$
gravitational constant	G	=	$6.67 \times 10^{-11}\ \text{N m}^2\ \text{kg}^{-2}$
permittivity of free space	ε_0	=	$8.85 \times 10^{-12}\ \text{F m}^{-1}$
	$(\frac{1}{4\pi\varepsilon_0}$	=	$8.99 \times 10^{9}\ \text{m F}^{-1})$
Planck constant	h	=	$6.63 \times 10^{-34}\ \text{J s}$
Stefan–Boltzmann constant	σ	=	$5.67 \times 10^{-8}\ \text{W m}^{-2}\ \text{K}^{-4}$

Formulae

uniformly accelerated motion	s	=	$ut + \frac{1}{2}at^2$
	v^2	=	$u^2 + 2as$
hydrostatic pressure	Δp	=	$\rho g \Delta h$
upthrust	F	=	$\rho g V$
Doppler effect for sound waves	f_o	=	$\frac{f_\text{s} v}{v \pm v_\text{s}}$
electric current	I	=	$Anvq$
resistors in series	R	=	$R_1 + R_2 + \ldots$
resistors in parallel	$\frac{1}{R}$	=	$\frac{1}{R_1} + \frac{1}{R_2} + \ldots$

© UCLES 2022

BLANK PAGE

1 **(a)** Define velocity.

.....

..... [1]

(b) A rock of mass 7.5 kg is projected vertically upwards from the surface of a planet. The rock leaves the surface of the planet with a speed of $4.0\,m\,s^{-1}$ at time $t = 0$. The variation with time t of the velocity v of the rock is shown in Fig. 1.1.

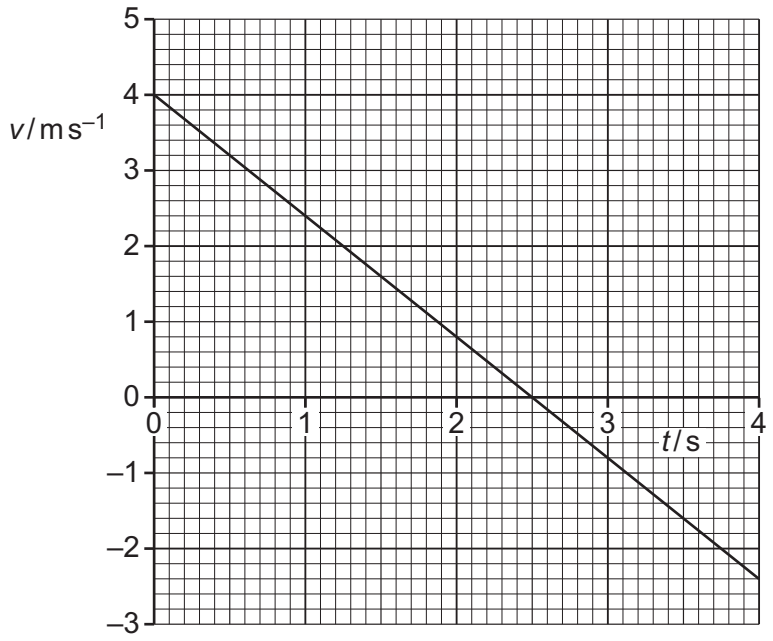

Fig. 1.1

Assume that the planet does not have an atmosphere and that the viscous force acting on the rock is always zero.

(i) Determine the height of the rock above the surface of the planet at time $t = 4.0\,s$.

height = ... m [3]

(ii) Determine the change in the momentum of the rock from time $t = 0$ to time $t = 4.0\,\text{s}$.

change in momentum = ... Ns [2]

(iii) Determine the weight W of the rock on this planet.

W = ... N [2]

(c) In practice, the planet in **(b)** does have an atmosphere that causes a viscous force to act on the moving rock.

State and explain the variation, if any, in the resultant force acting on the rock as it moves vertically upwards.

.....

.....

.....

..... [2]

[Total: 10]

2 **(a)** State what is meant by the centre of gravity of an object.

.....

..... [1]

(b) A non-uniform rod XY is pivoted at point P, as shown in Fig. 2.1.

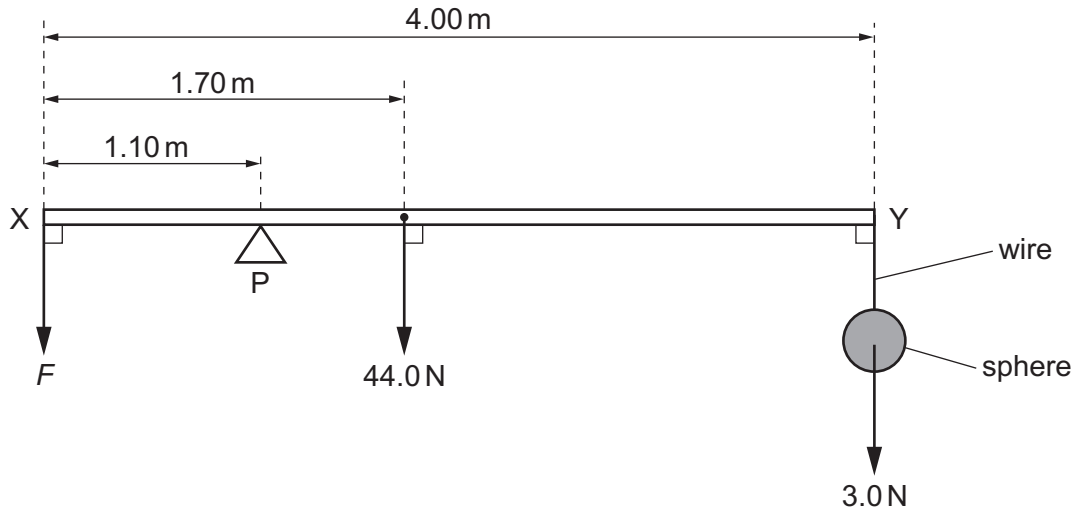

Fig. 2.1 (not to scale)

The rod has length 4.00 m and weight 44.0 N. The centre of gravity of the rod is 1.70 m from end X of the rod. Point P is 1.10 m from end X.

A sphere hangs by a wire from end Y of the rod. The weight of the sphere is 3.0 N. The weight of the wire is negligible.

A force *F* is applied vertically downwards at end X so that the horizontal rod is in equilibrium.

(i) By taking moments about P, calculate *F*.

F = ... N [3]

(ii) Calculate the force exerted on the rod by the pivot.

force = ... N [1]

© UCLES 2022

(c) The sphere in **(b)** is now immersed in a liquid in a container, as shown in Fig. 2.2.



Fig. 2.2

The density of the liquid is 1100 kg m^{-3}. The upthrust acting on the sphere due to the liquid is 2.5 N. The magnitude of F is unchanged so that the horizontal rod is **not** in equilibrium.

(i) Use Archimedes' principle to determine the radius r of the sphere.

r = ... m [3]

(ii) Calculate the magnitude and direction of the resultant moment of the forces on the rod about P.

magnitude of resultant moment = ... N m

direction of resultant moment .....
[2]

[Total: 10]

3 **(a)** **(i)** Define power.

.....

..... [1]

(ii) A force F takes time t to move an object through a displacement x at constant velocity v in the direction of the force. The work done by the force is W.

Use the definition of power to show that the power P transferred by the force is given by

$$P = Fv.$$

[2]

(b) A block is pulled up a slope by a wire attached to a motor, as shown in Fig. 3.1.

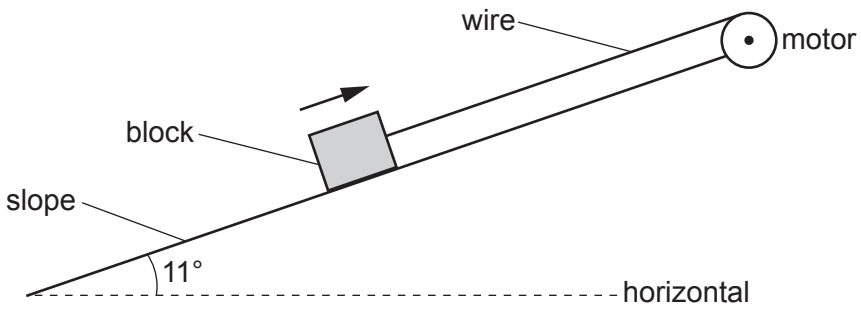

Fig. 3.1 (not to scale)

The useful power output of the motor is 56 W. The block has a weight of 430 N and travels with constant velocity along the slope at an angle of 11° to the horizontal.

Assume that there are no resistive forces opposing the motion of the block.

(i) Calculate the tension T in the wire.

T = ... N [2]

© UCLES 2022

(ii) Calculate the speed of the block.

speed = ... $m\,s^{-1}$ [1]

(iii) The rate of increase of gravitational potential energy of the block is equal to the useful power output of the motor. One of the reasons for this is that there is no work done against resistive forces.

By considering the motion of the block, state another reason for this.

.....

..... [1]

(iv) The motor has an efficiency of 80%.

Calculate the time taken for an input energy of 1.2 kJ to be supplied to the motor.

time taken = ... s [2]

[Total: 9]

© UCLES 2022

4 A spring is suspended from a fixed point at one end and a vertical force is applied to the other end, as shown in Fig. 4.1.

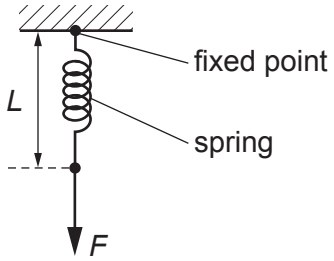

Fig. 4.1

The variation of the applied force F with the length L of the spring is shown in Fig. 4.2.

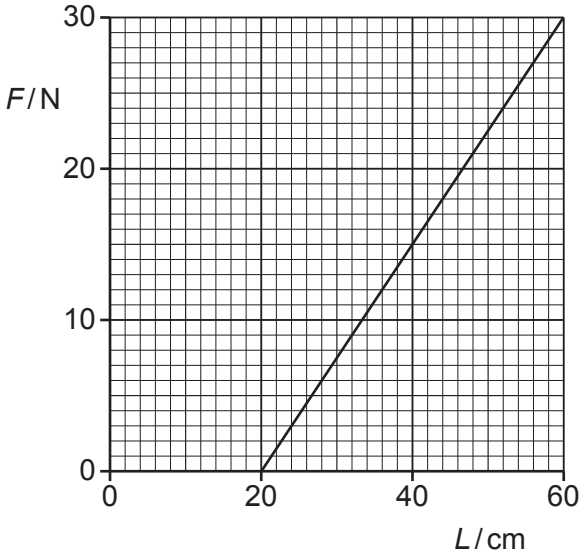

Fig. 4.2

(a) Determine the spring constant k of the spring.

k = ... $N\,m^{-1}$ [2]

(b) Determine the elastic potential energy in the spring when the applied force F is 15 N.

elastic potential energy = ... J [3]

[Total: 5]

5 A horizontal string is stretched between two fixed points A and B. A vibrator is used to oscillate the string and produce an observable stationary wave.

At one instant, the moving string is straight, as shown in Fig. 5.1.



Fig. 5.1

The dots in the diagram represent the positions of the nodes on the string. Point P on the string is moving downwards.

The wave on the string has a speed of $35\,m\,s^{-1}$ and a period of $0.040\,s$.

(a) Explain how the stationary wave is formed on the string.

.....

.....

.....

..... [2]

(b) On Fig. 5.1, sketch a line to show a possible position of the string a quarter of a cycle later than the position shown in the diagram. [1]

(c) Determine the horizontal distance from A to B.

distance = ... m [3]

(d) A particle on the string has zero displacement at time $t = 0$. From time $t = 0$ to time $t = 0.060$ s, the particle moves through a total distance of 72 mm.

Calculate the amplitude of oscillation of the particle.

amplitude = ... mm [2]

[Total: 8]

6 **(a)** State Kirchhoff's first law.

.....

..... [1]

(b) A battery is connected to two resistors X and Y, as shown in Fig. 6.1.

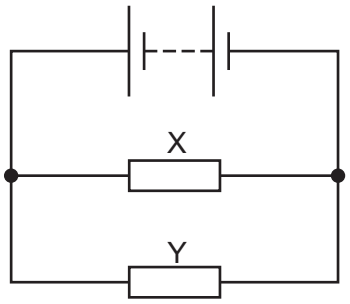

Fig. 6.1

The resistance of resistor X is greater than the resistance of resistor Y.

(i) State and explain which resistor dissipates more power.

.....

.....

.....

.....

..... [3]

(ii) The two resistors are made of wires that have the same length. Both wires are made from metal of the same resistivity.

State and explain which resistor is made of wire with the larger cross-sectional area.

.....

.....

..... [2]

© UCLES 2022

(c) A battery of electromotive force (e.m.f.) 9.0 V and negligible internal resistance is connected in series with a light-dependent resistor (LDR) and a fixed resistor of resistance 1800 Ω, as shown in Fig. 6.2.

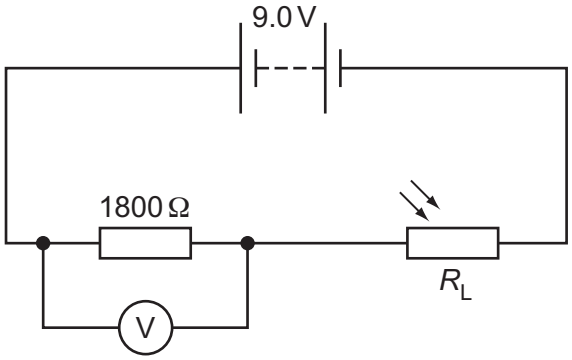

Fig. 6.2

A voltmeter is connected across the fixed resistor. The reading on the voltmeter is 5.4 V.

(i) Calculate the current in the circuit.

current = ... A [1]

(ii) Calculate the resistance R_L of the LDR.

R_L = ... Ω [2]

(iii) The intensity of the light illuminating the LDR increases.

By reference to the current in the circuit, state and explain the change, if any, to the voltmeter reading.

.....

.....

.....

..... [2]

[Total: 11]

7 **(a)** An unstable nucleus ${}^{A}_{Z}X$ decays by emitting a β^- particle.

(i) Determine quantitatively the changes, if any, in A and Z when X decays.

change in A = ...

change in Z = ...
[2]

(ii) In addition to the β^- particle, another lepton is emitted during the decay.

State the name of the other lepton that is emitted.

..... [1]

(b) A particle P is composed of an up quark (u) and a down antiquark ($\overline{\text{d}}$).

(i) Calculate the charge q of particle P in terms of e, where e is the elementary charge.

Show your working.

q = ... e [2]

(ii) Particle P belongs to **two** classes (groups) of particles.

State the names of these two classes.

1 .....

2 .....
[2]

[Total: 7]

Permission to reproduce items where third-party owned material protected by copyright is included has been sought and cleared where possible. Every reasonable effort has been made by the publisher (UCLES) to trace copyright holders, but if any items requiring clearance have unwittingly been included, the publisher will be pleased to make amends at the earliest possible opportunity.

To avoid the issue of disclosure of answer-related information to candidates, all copyright acknowledgements are reproduced online in the Cambridge Assessment International Education Copyright Acknowledgements Booklet. This is produced for each series of examinations and is freely available to download at www.cambridgeinternational.org after the live examination series.

Cambridge Assessment International Education is part of Cambridge Assessment. Cambridge Assessment is the brand name of the University of Cambridge Local Examinations Syndicate (UCLES), which is a department of the University of Cambridge.

© UCLES 2022